5. Due to a dimension change in the gear box, below you will find 3 dimensions that may be necessary to know during installation.

	From S.N. 001-1499	S.N. 1500-2009	S.N. 2010
Overall length	27.36″	27.36″	26.37″
Waterpump to center of forward mount	14.88″	12.12″	12.12″
Center of forward mount to output flange	12.12″	14.88″	13.89″

6. A four point conical mount system is available for retrofit of the previously standard 2 conical and two rubber bearing mount system. The four point mount system includes the following parts and quantities necessary to change D-12 from standard to modified mounting.

Rubber mount	-	P.N. 11 81 1 333 259 - 4
Nut M 16 x 1.5	-	P.N. 07 11 9 922 176 - 8
Washer	-	P.N. 07 11 9 931 094 - 8
Front bracket	-	P.N. 11 81 1 333 627 - 2
Front bracket bolts	-	P.N. 07 11 9 913 834 - 4

It will be necessary to reverse original front engine brackets. See diagram # 1.

7. A water pump conversion kit is available to help extend the life span of the pump impeller. The difference is the thickness of the cam in the pump. The component part numbers are listed below.

Kit	-	17 11 1 333 604	(includes parts listed below)		
Impeller	-	17 11 1 329 158	Washer	-	17 11 1 329 164
Gasket	-	17 11 1 329 161	Screw	-	17 11 1 333 605
Half Cam	-	17 11 1 333 603			

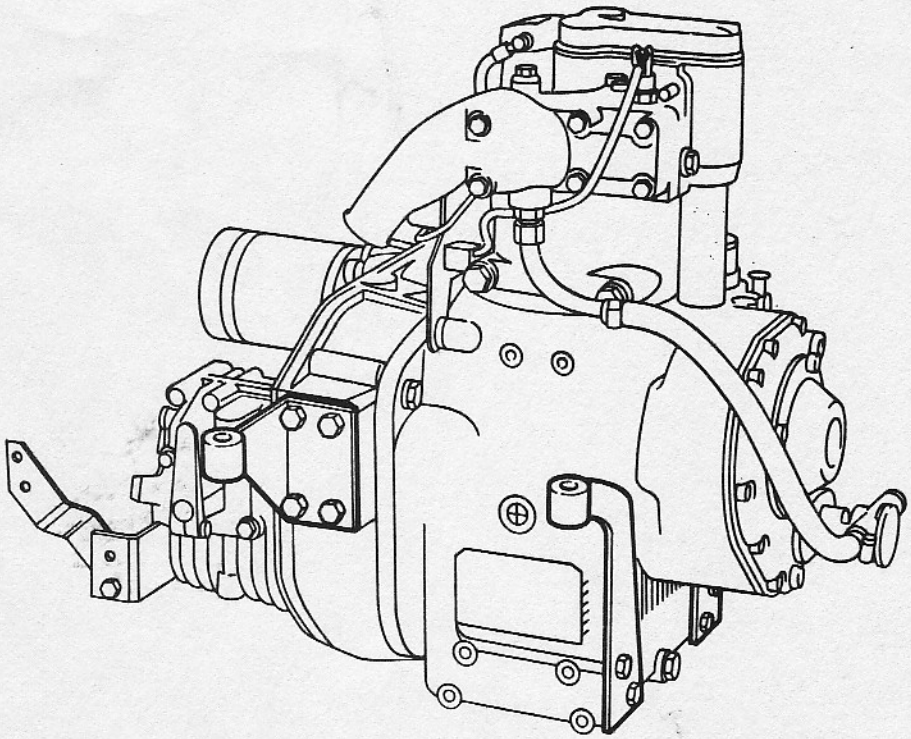

DIAGRAM #1