Diagram 1

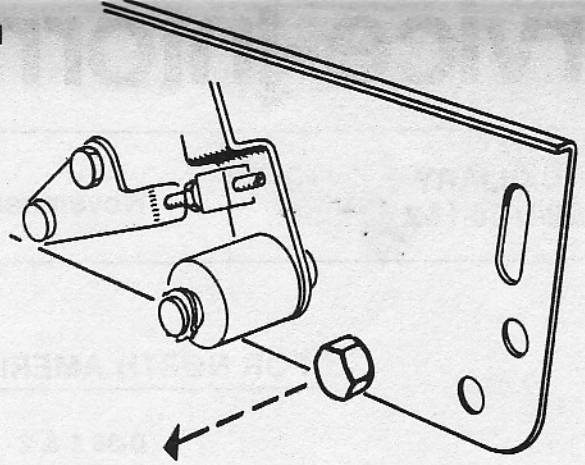

Abbildung/Figure 1 - Vor der Umrustung / Before modification

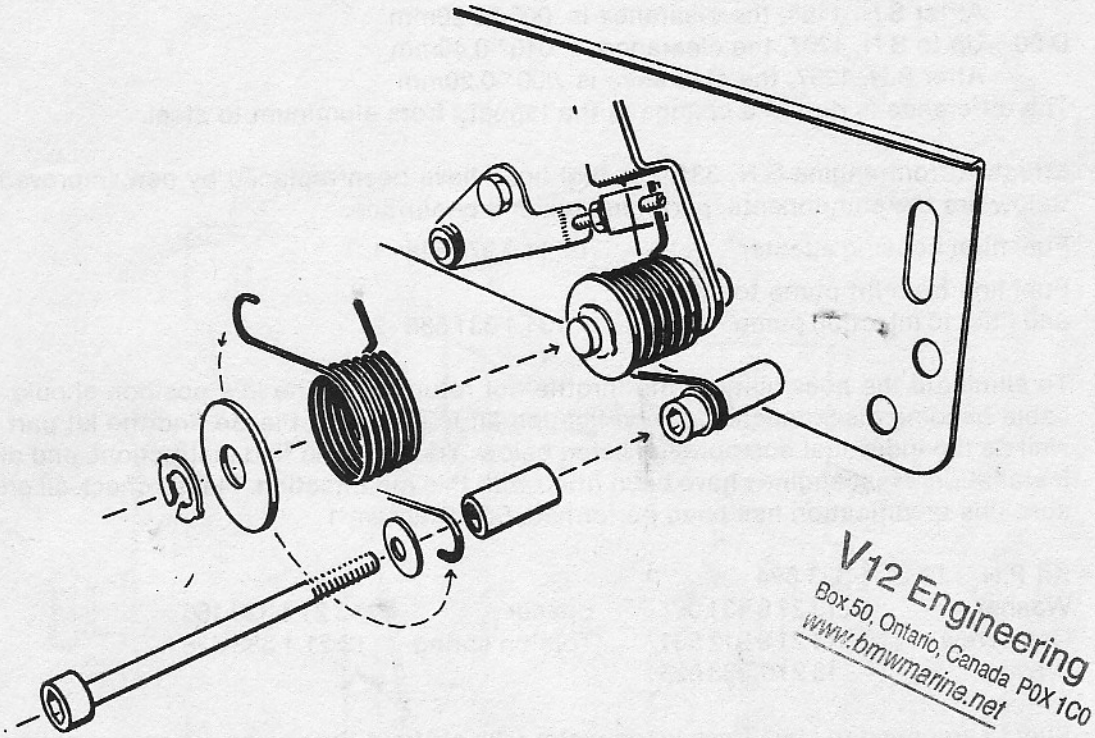

Abbildung/Figure 2 - Montage des Umbausatzes / Installation of modification kit

. . ./ Seite 2

Installation Instructions (See drawing enclosed)

— Loosen lower front fixing screw of the throttle-bracket (Screw and spring ring will not be used anymore).

— Remove security-clip from throttle shaft

— Remove washer

— Put on torsion spring

— Put washer and clip on

— Fasten the other end of the torsion spring with screw, washer and spacer delivered with the kit.

See drawing enclosed: Fig. 1 before modification
Fig. 2 installation of modification kit