merCruiser
STERN DRIVES & INBOARDS

service bulletin

TO: SERVICE MANAGER ☐ TECHNICIANS ☐
PARTS MANAGER ☐

No. 89-2

B.M.W. D190/D150 Models Overheating

The models listed above are B.M.W. production for which MerCruiser is responsible for service. When experiencing an overheating condition with these engines, MerCruiser suggests that the following procedures are used.

Check The Following Points First:

- Cooling system at proper level. (1/2" – 3/4" [12–20mm] below filler neck)
- Malfunction of instruments (gauges, senders, wires, grounds, etc.)
- Check engine temperature with an accurate independent instrument
- Pressure check cooling system and cap using an automotive cooling system pressure tester, if available. 14 PSI (100 kPa). Replace with new cap, neck and coolant recovery bottle
  – Cap P/N 36-13130
  – Neck P/N 812658
  – Coolant Recovery Kit P/N 71587A7
  – And Hose P/N 32-19833-89

NOTE: *A new style cap and neck must be used on all cooling systems. The old style cap, being a single seal type, is vulnerable to leaking.* ***The coolant bottle Is for over-flow only and must remain empty when engine is cold****.*

- Engine circulating pump malfunction
  Loose alternator belt?
  Impeller vanes worn?
  Impeller shaft seal failure?
  Impeller clearance to pump housing?
  015 –.020 (.038mm –.50mm)
  Replace with new style pump
  (Date Code 7/87) P/N 46-814255
  (Figure 6C)
- Engine coolant concentration? (50/50 mix)

NOTE: *–34° F (–37° C) indicates a 50/50 mix.*

- Water intake blocked (Figure 1 & 2)
  Propeller ventilation?
  Interference of keel?
  Inlet hose collapsing?
  (Check during operation)
- Injection timing correct?

Check for Internal Engine Cooling Problems:

- Exhaust gases entering closed cooling system? Remove 1 in. (25mm) plug from rear of exhaust manifold (Figure 10B) and install water pressure gauge. If higher pressure is obtained than listed, exhaust gases exist in system. Make a compression test for head gasket leakage.
  Coolant System Pressure
  800 RPM (Idle) 6 PSI (41 kPa)
  3800 RPM (WOT) 20 PSI (137 kPa)

  OR

  Replace hose between heat exchanger and engine circulating pump with clear plastic hose. (Figure 14B) Watch for gas bubbles.
- Exhaust gases existing in the closed cooling system may also be determined by using a combustion leak tester.

NOTE: *Snap-on Tools has Combustion Leak Tester available for testing coolant for exhaust gases. (Block Combustion Leak Tester P/N GA170B)*

Snap on tools are readily available in Europe. For the nearest dealer or distributor, contact the home office in the U.S.A.

Snap-On Tools
Kenosha, WI
Phone 414-656-5200
Fax 414-656-1403
Telex 431-1080-SNAP-ON-KNE

- Air entering seawater cooling system? Replace hose between heat exchanger and exhaust elbow with clear hose. (Figure 14C) Watch for air bubbles.

- Check if vent hole in heat exchanger directly under filler cap is open. (Figure 14A)
- Check thermostats for proper opening degrees. 170° F– 178° F (77° C – 81° C). (Figure 11D)
- Check vent line from turbocharger to expansion tank (Figure 12C) and from water manifold to expansion tank (Figure 9B) are open.

All Previous Steps Checked and/or Completed and Engine Still Overheating, it will be Necessary to Clean and Flush the Closed Cooling System.

Following are procedures for cleaning and flushing the system.

1. Drain fresh water circuit of the engine.
2. Completely flush the cooling circuit using an alkaline based engine cleaner. Follow the instruction on the container for proper use.

   NOTE: *Recommended Cleaners*

   Quicksilver Cooling System Cleaner
   P/N 92-814825
   Caterpillar Cooling System Cleaner
   (Caterpillar Tractor Co.)
   John Deere Cooling System Cleaner
   (Deere & Co.)
   Nalprep 2001 (Nalco Chemical Co.)
   Peak Professional Cooling System Cleaner
   (Northern Pestrochemical Co.)
   Restore (Fleetguard Inc.)

3. To drain flushed engine remove hose between circulating pump and heat exchanger. (Figure 14B)
4. Remove plug (Figure 10B). Connect a clean water supply to the manifold where plug was removed.
5. Flush the system until the exiting water is clean.

NOTE: *Flushed water will exit from the circulating pump hose and heat exchanger.*

6. Reinstall plug after flushing is complete.
7. Remove circulating pump and inspect impeller and housing for cavitation. (Figure 6A) Also inspect for shaft deflection and worn or leaking seals. Replace old style pump (New Pump Date Code 7/87 and Above, Figure 6C)
8. Remove both seawater inlet and outlet covers located on the port and starboard side of the heat exchanger. (Figure 11E & F)
9. Remove the inner core of the oil and water exchanger using tool P/N 91-801761156. (Figure 5B)

NOTE: Not *using the tool will cause damage to the core flange.*

10. Inspect coolant core for any damage or restrictions. Replace if necessary.
11. Any brown scale or green slime found on the coolant core must be removed.

⚠ WARNING

WEAR PROTECTIVE CLOTHING AND PROPER EYE PROTECTION WHEN USING ACID SOLUTION.

   a. Submerge the core into a 20% solution of phosphoric acid and water or a 20% solution of muriatic acid and water.
   b. Leave in solution for 20 minutes minimum, or until clean.
   c. Remove and rinse the core thoroughly.
   d. Or have a local radiator service shop clean the core.

12. Remove all gasket material on the core flange, end cap and housing face. Inspect inside the exchanger aluminum housing and clean if necessary.
13. Before installing exchanger cores into housing, it will be necessary to crimp both baffles located on the side of exchangers.
   a. Following are illustrations showing a correct and incorrect baffle. (Sketch C, Item B).
   b. The side baffle must have a 10 degree angle from the core. The crimp applied to the baffle must also have a 10 degree angle, 1/4 in. (6mm) deep. (Sketch C, Item C).
   c. Attached is a drawing of the tool needed to crimp the baffles of the core. (Sketch A & B)

NOTE: *There are two different tools shown in the drawing. (Sketch A) Tool A is a permanent type tool for repetitive use. Tool B, being simpler, uses two pieces of flat stock steel of the correct length pressed together by two vise grips. (Sketch B)*

NOTE: *The baffle 10 degree 1/4 in. (6mm) crimp applied at the tip of the side baffles removes any wave in the baffle.*

   d. Baffles on rear of both coolant and oil exchanger cores must be bent down. Caution must be taken not to damage core. (Figure 15)

e. Install rubber baffle on the end of both cores. (Figures 16,17)

Rubber Baffles	
Coolant Side	P/N 26-815173
Oil Side	P/N 26-815172

14. Lubricate and install new O-rings on exchanger core.

15. Apply Sealant 92-814826 or Loctite Master Gasket P/N 92-12564--1 on both sides of the cores sealing surfaces and carefully install core into aluminum housing, being careful not to damage O-rings.

16. Install clean end cap and tighten bolts securely.

17. Install circulating pump using a new gasket.

18. Make all hose connections and fill the system with Quicksilver Pre-mixed Anti-freeze P/N 92-813054A2 (Date code 11/88) or an equivalent low-silicate brand (1/2" – 3/4" [12 – 20mm] below filler neck).

19. Deaerate cooling system by running engine at idle for 1 – 2 minutes with filler cap removed. Stop engine and top off coolant per item 18 preceding. Replace cap and run engine 5 – 10 minutes at 2000 – 3000 RPM. Allow engine to cool. Recheck coolant level and top off as required.

NOTE: *Using anti-freeze other than Quicksilver Engine Coolant a low silicate 50/50 pre-mixed coolant with proper additives and manufactured for diesel engines must be used.*

"SKETCH A"

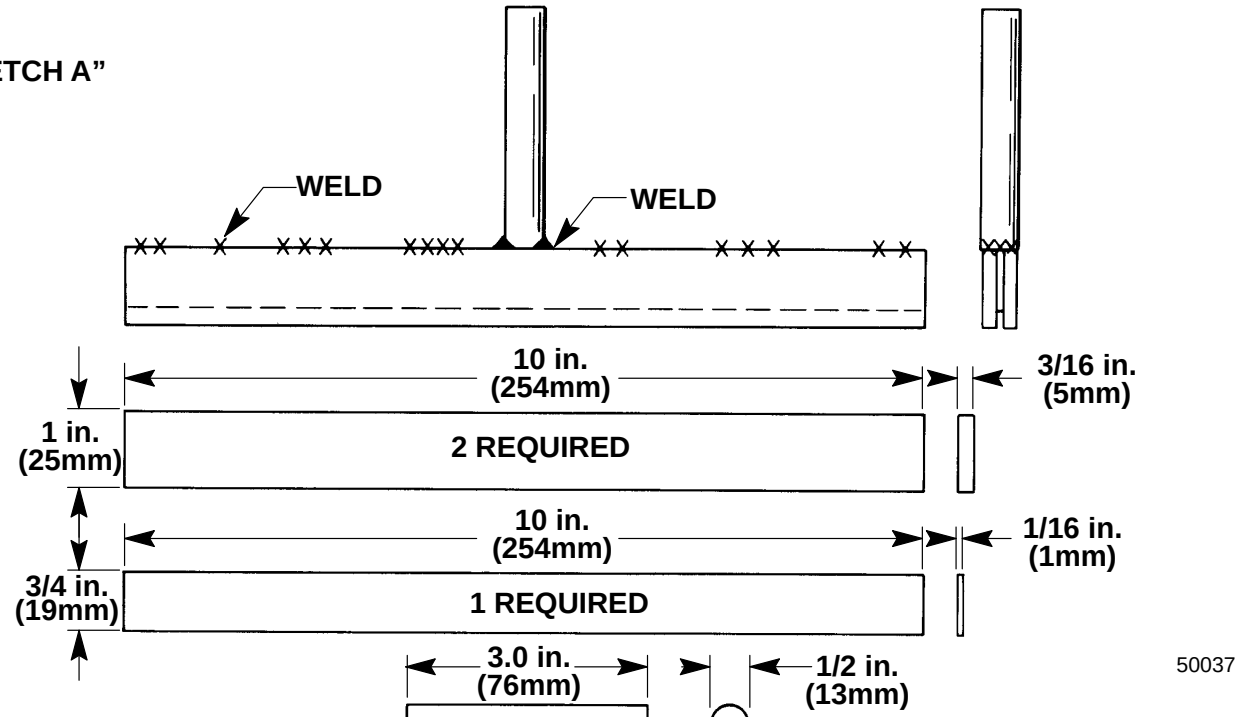

"SKETCH B"

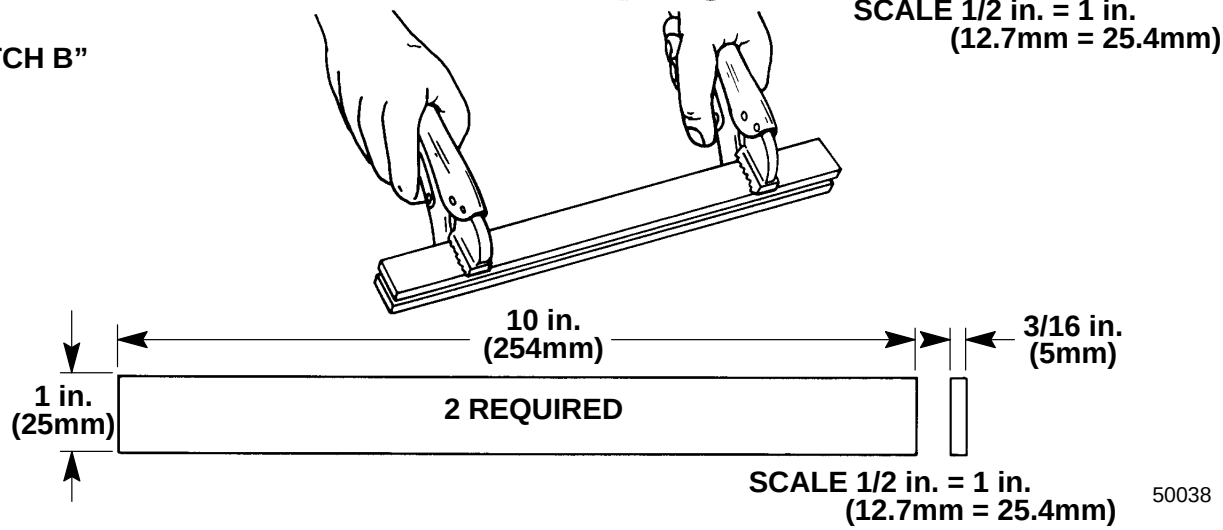

"SKETCH C"

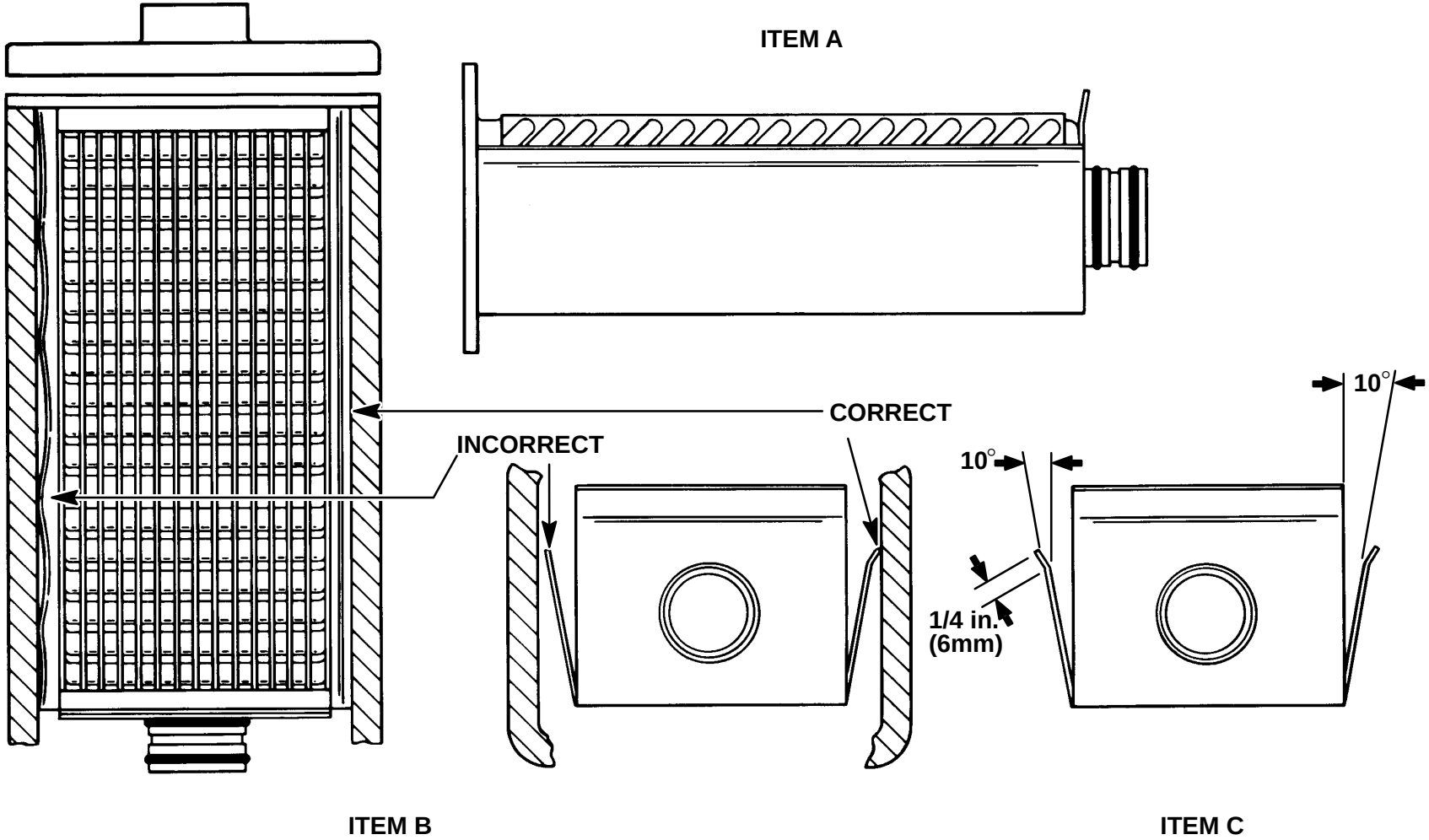

- Following are illustrations of Cooling System Checkpoints referred to in previous instructions.
  - Figure 1 – 5 refer to the raw water circuit.
  - Figure 6 – 14 refer to the fresh water circuit.

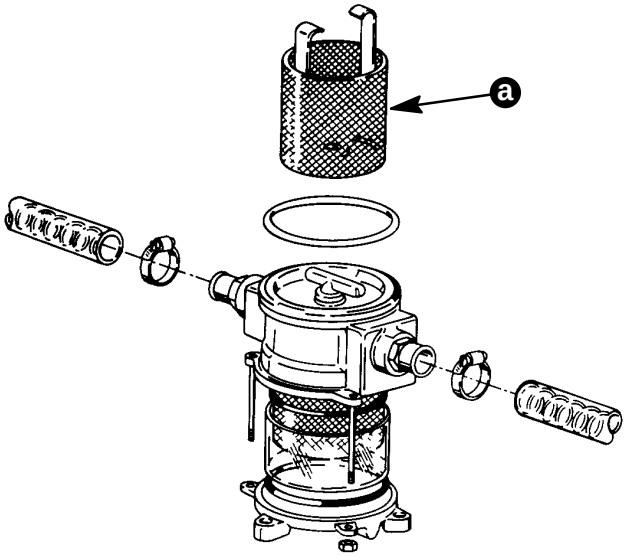

50359A

a - Check Strainer for Restriction

Figure 1. Raw Water Filter

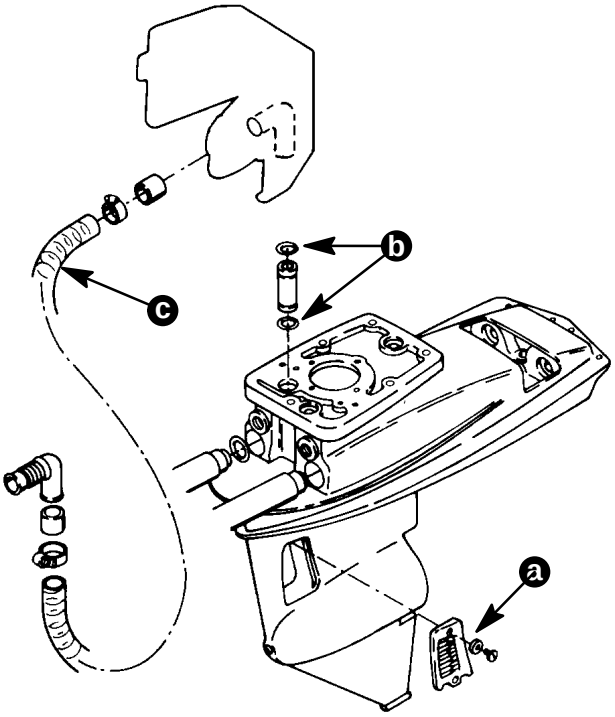

50360B

a - Check water Pick-Up for Restriction
b - O-Rings Leaking, Not Sealing
c - Inlet Hose Tore or Kinked

Figure 2. B.M.W. Stern Drive

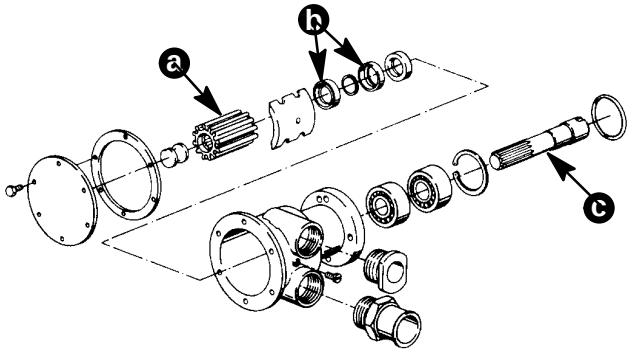

50361A

a - Impeller Worn
b - Worn Seal
c - Shaft Deflection

Figure 3. Sea Water Pump

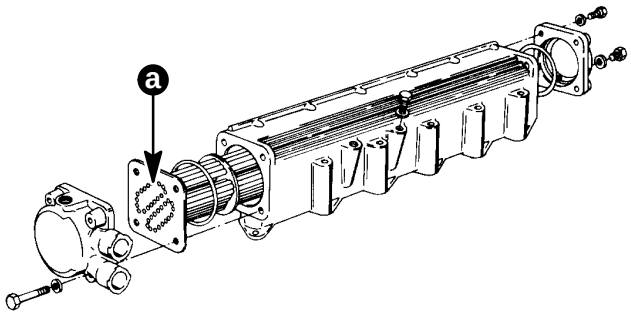

50362B

a - Check Core for Restriction

Figure 4. After Cooler Manifold

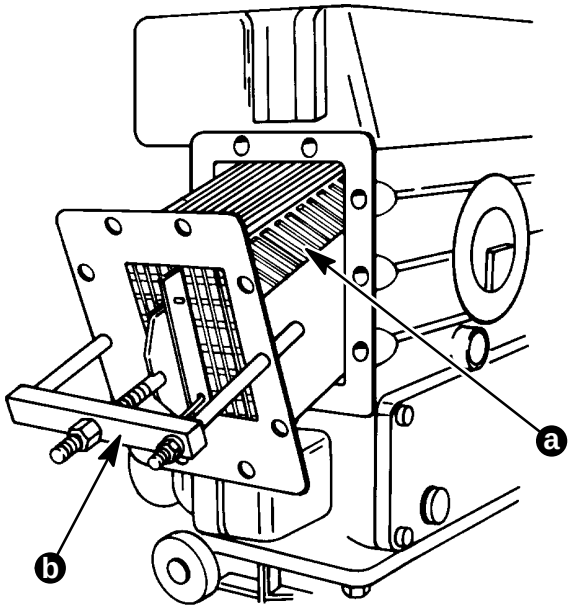

50360

a - Check Core for Restriction
b - Exchanger Puller (P/N 91-801761156)

Figure 5. Water/Coolant Heat Exchanger

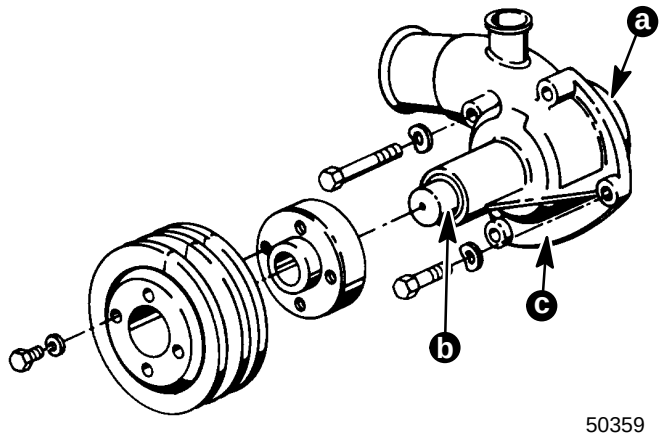

a - Check Impeller for Cavitation
b - Check for Shaft Deflection/Seal Wear
c - Date Code (7/87 or Newer)

Figure 6. Engine Circulation Pump

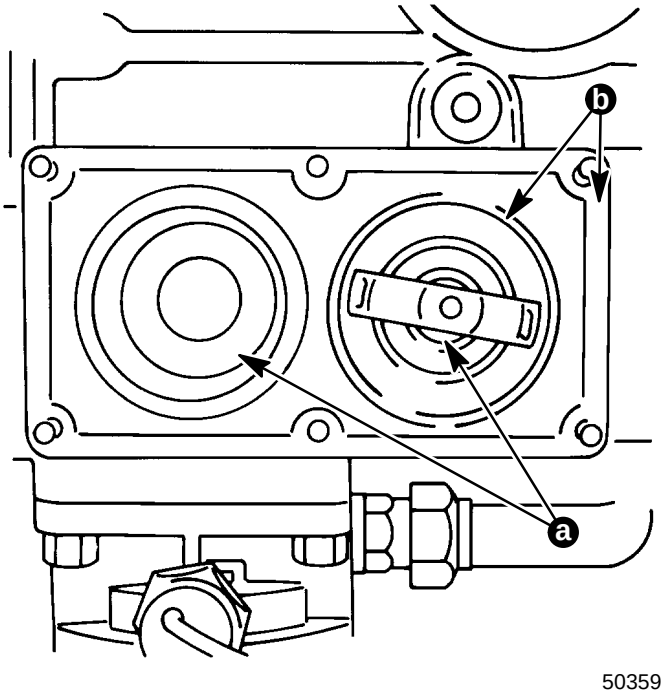

a - Check Thermostat for Correct Temperature Opening
b - Thermostat and Cover Sealing

Figure 7. Thermostats Housing

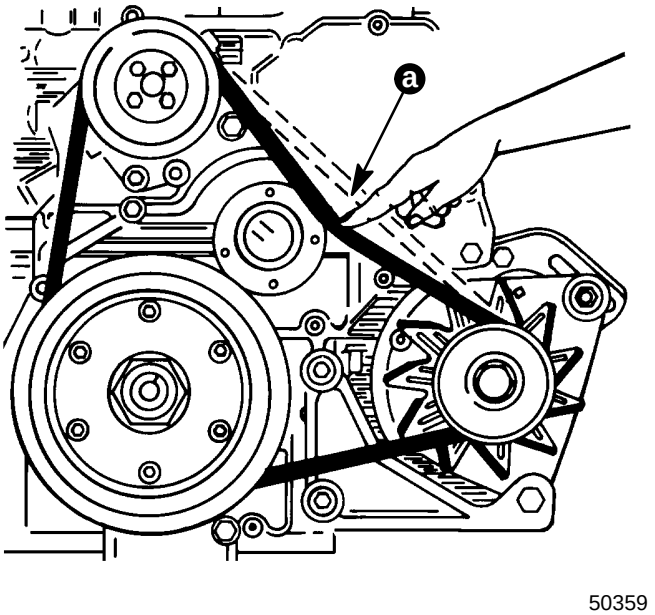

a - Check Belt for Slipping or Loose

Figure 8. Belt Tension

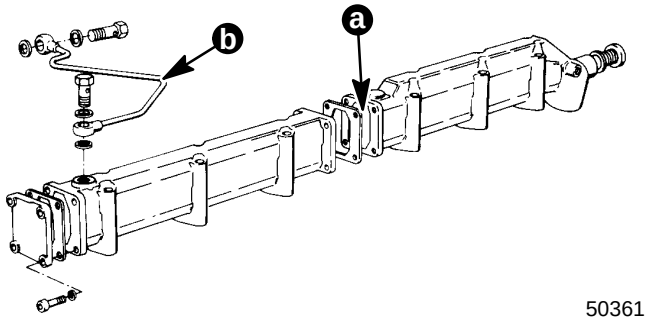

a - Water Passage Restricted
b - Vent Line Plugged

Figure 9. Water Manifold to Cylinder Heads

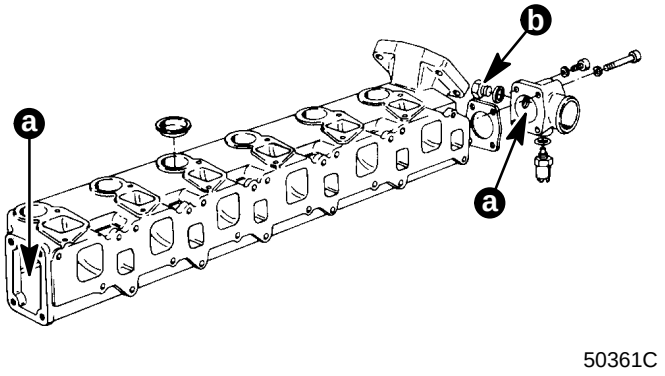

a - Water Passages Restricted
b - Remove Plug for Exhaust Pressure Check

Figure 10. intake/Exhaust Manifold

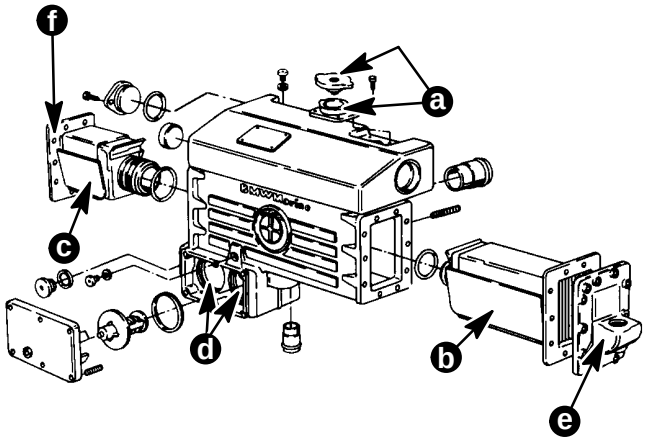

a - Replace with New Double Lip Seal Cap and Neck
b - Coolant Exchanger
c - Oil Exchanger
d - Dual Thermostats
e - Raw Water Outlet
f - Raw Water Inlet (Not Shown)

Figure 11. Heat Exchanger Tank

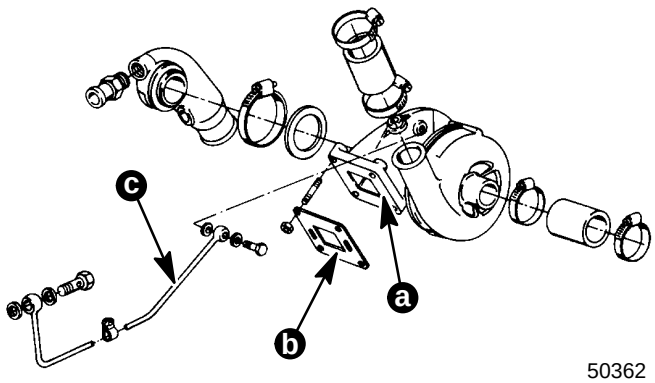

a - Water Passages Restricted
b - Gasket Leaking
c - Vent Line Restricted

Figure 12. Turbo Charger

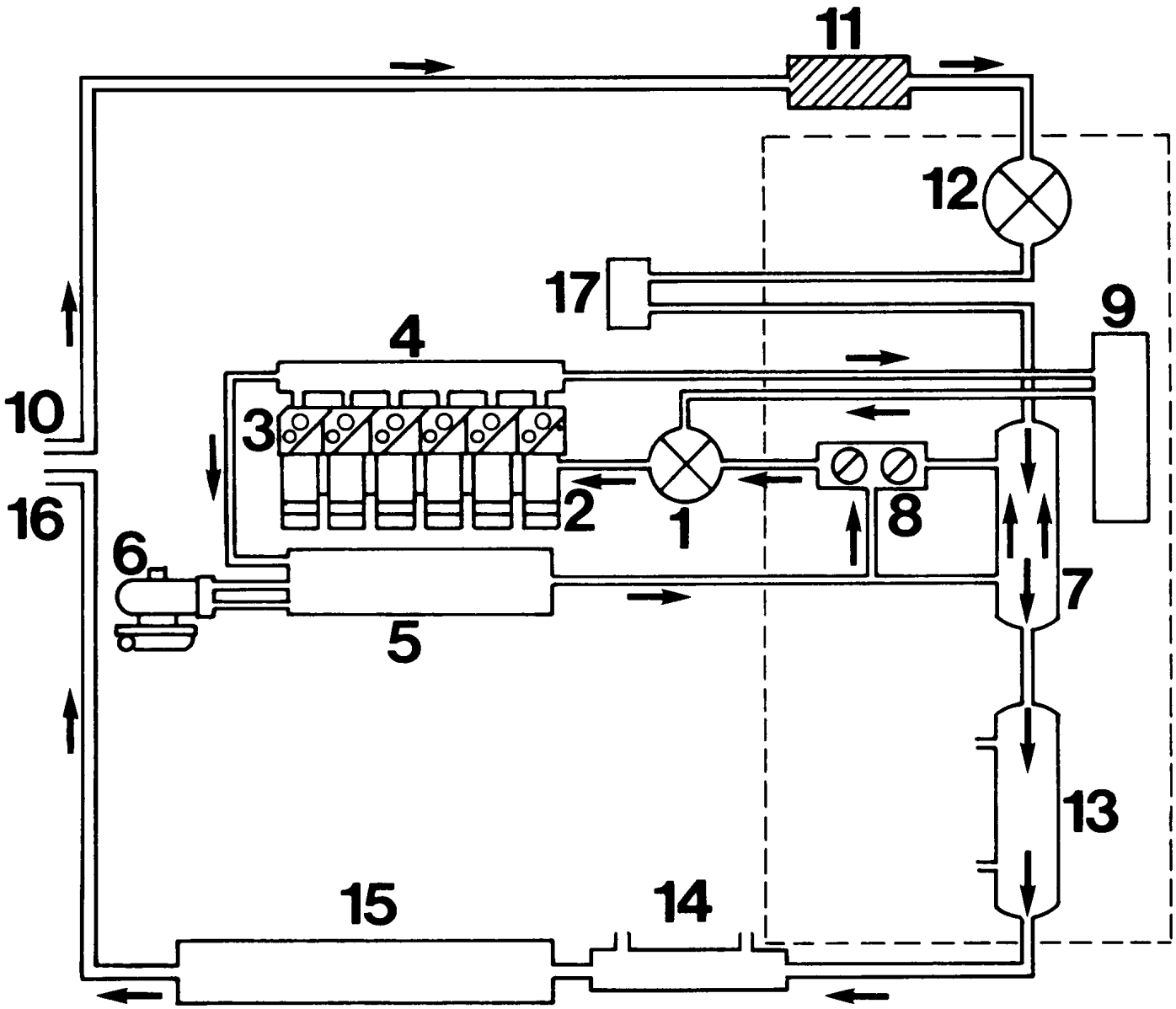

23178

COOLING SYSTEM

1. Fresh water pump
2. Engine block (upper section of liners)
3. Cylinder heads
4. Water manifold
5. Exhaust manifold
6. Exhaust–gas turbine
7. Heat exchanger Water/water
8. Thermostats
9. Expansion tank
10. Raw water inlet
11. Raw water filter
12. Raw water pump
13. Heat exchanger Water/oil
14. Exhaust pipe (water sleeve)
15. Raw water outlet
16. Intercooler

Figure 13. Water/Coolant Flow

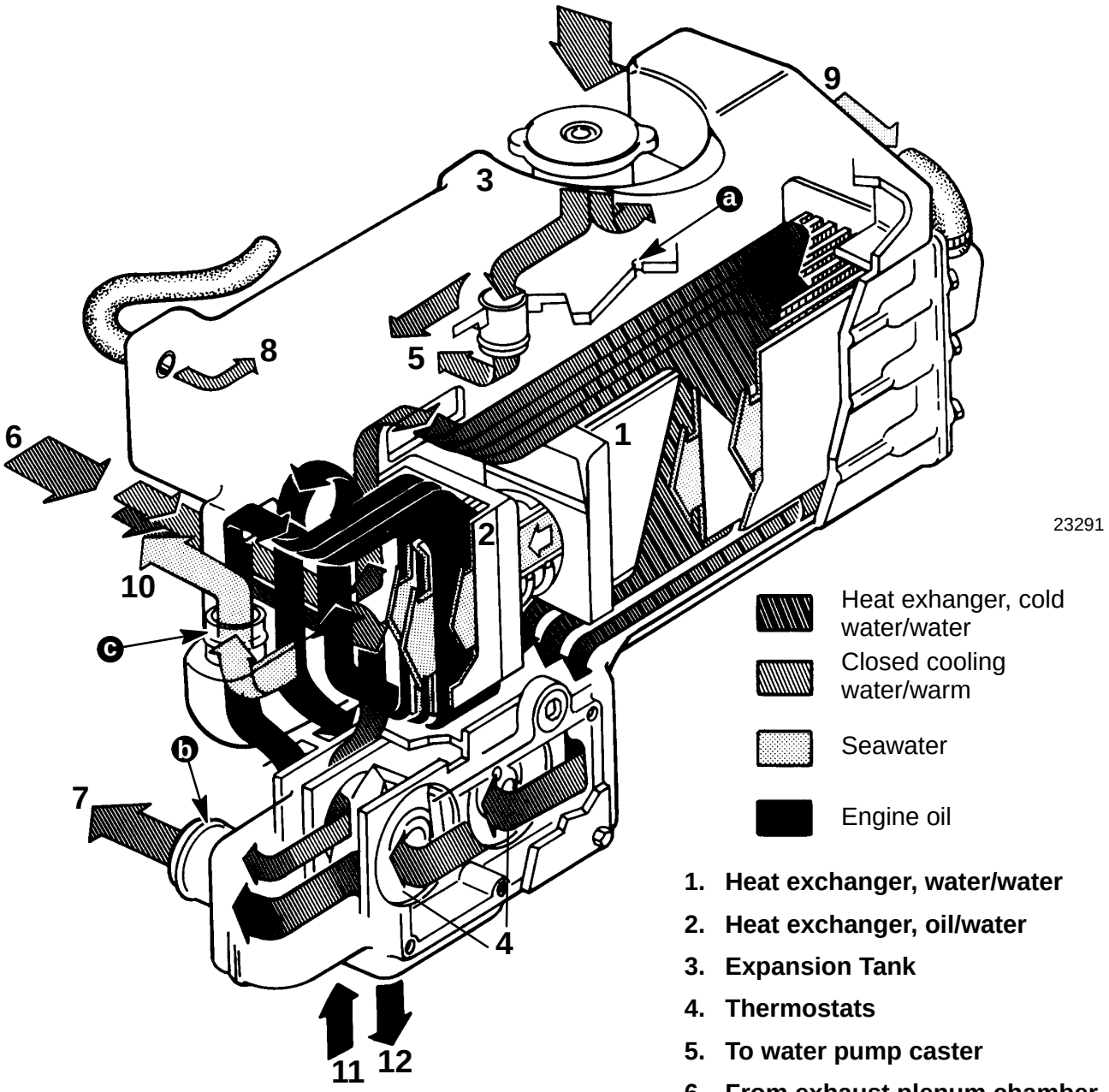

a - Vent Hole Must Not Be Restricted
(View Through Filler Neck with Cap Removed)
b - Install Clear Hose (Fresh Water)
c - Install Clear Hose (Sea Water)

Figure 14. Heat Exchanger Flow

1. **Heat exchanger, water/water**
2. **Heat exchanger, oil/water**
3. **Expansion Tank**
4. **Thermostats**
5. **To water pump caster**
6. **From exhaust plenum chamber**
7. **To water pump**
8. **From water manifold (pressure return pass)**
9. **From seawater pump**
10. **To exhaust gas end pipe**
11. **From oil temperature sender**
12. **To oil filter**

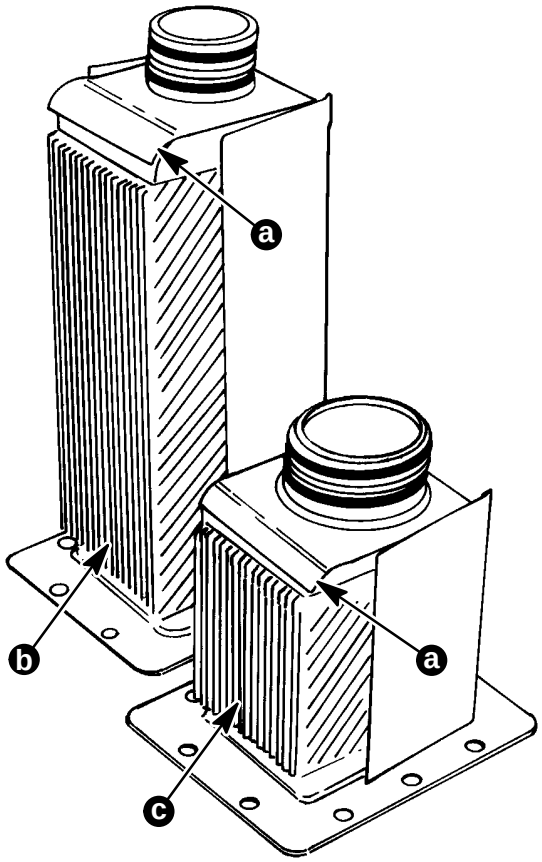

26403

a - Bend Baffle Over Core As Shown. DO NOT Damage Core.
b - Coolant Core
c - Oil Core

Figure 15.

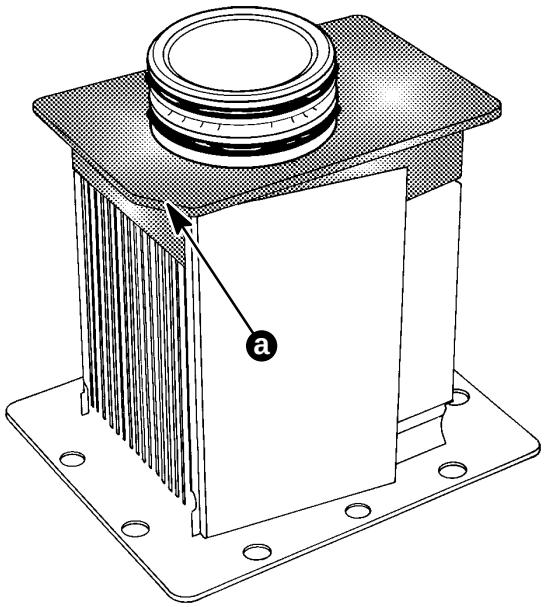

70949

a - Baffle Installed on Oil Core (Notched Corners)
P/N 26-815172

Figure 16.

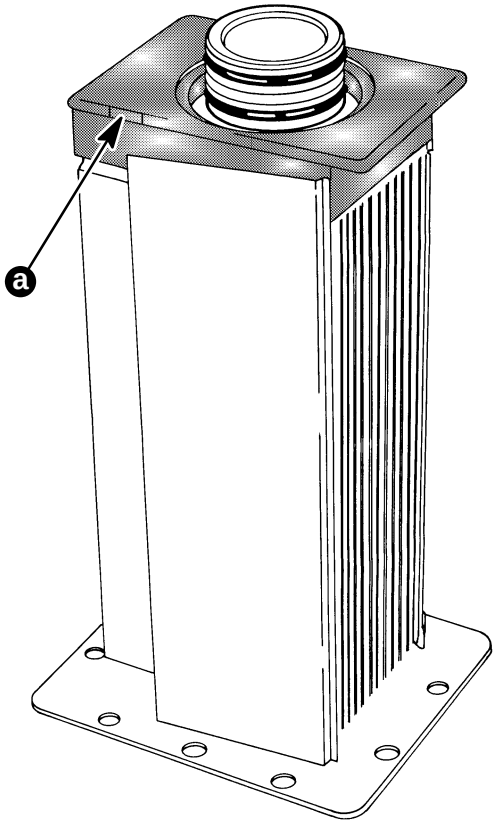

70948

a - Baffle Installed on Coolant Core (Full Corners)
P/N 26-815173

Figure 17.