9. A water pump conversion kit is available to help extend the life span of the pump impeller. The difference is the thickness of the cam in the pump. The component part numbers are listed below.

Kit	# 17 11 1 333 604	(includes parts listed below)	
Impeller	# 17 11 1 329 158	Washer	# 17 11 1 329 164
Gasket	# 17 11 1 329 161	Screw	# 17 11 1 333 605
Half Cam	# 17 11 1 333 603		

When replacing impellers, please check that the smaller cam is in the water pump.

10. There have been some cases where the engine would not shut down despite proper cable adjustments. You will find diagram #1 showing the modification that should be made to correct this problem.

11. New improved O-Rings are available to alleviate oil loss past original throttle shaft O-Rings. This O-Ring can be identified by a red color.

The original O-Ring is black.
New O-Ring P.N. - 11 12 1 329 531.

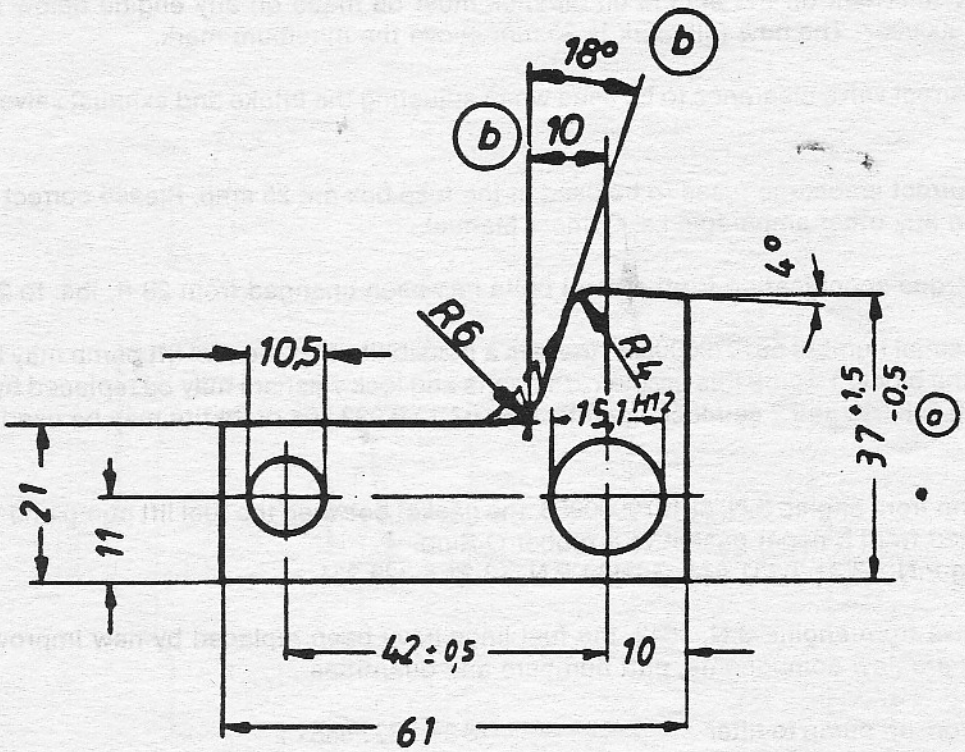

DIAGRAM #1

D-12

1. The correct valve clearance to be used when adjusting the intake and exhaust valves is .006″ (0.35 mm).

2. The correct amperage fuses to be used in the fuse box are 25 amp.

3. The correct injection timing setting to be used on the D-12 is 10° ± 0.5° BTDC. The setting of 13° BTDC is incorrect.

4. Effective from engine S.N. 1705, the fuel lines have been replaced by new improved fuel lines. Below are the new components, part numbers and quantities.

Line from lift pump to filter	-	13 31 1 331 588 - 1
Line from filter to injection pump	-	13 31 1 331 589 - 1
Adapter in top of fuel filter housing	-	07 11 9 070 516 - 2