Diagram 3

HYDRAULIC UNIT

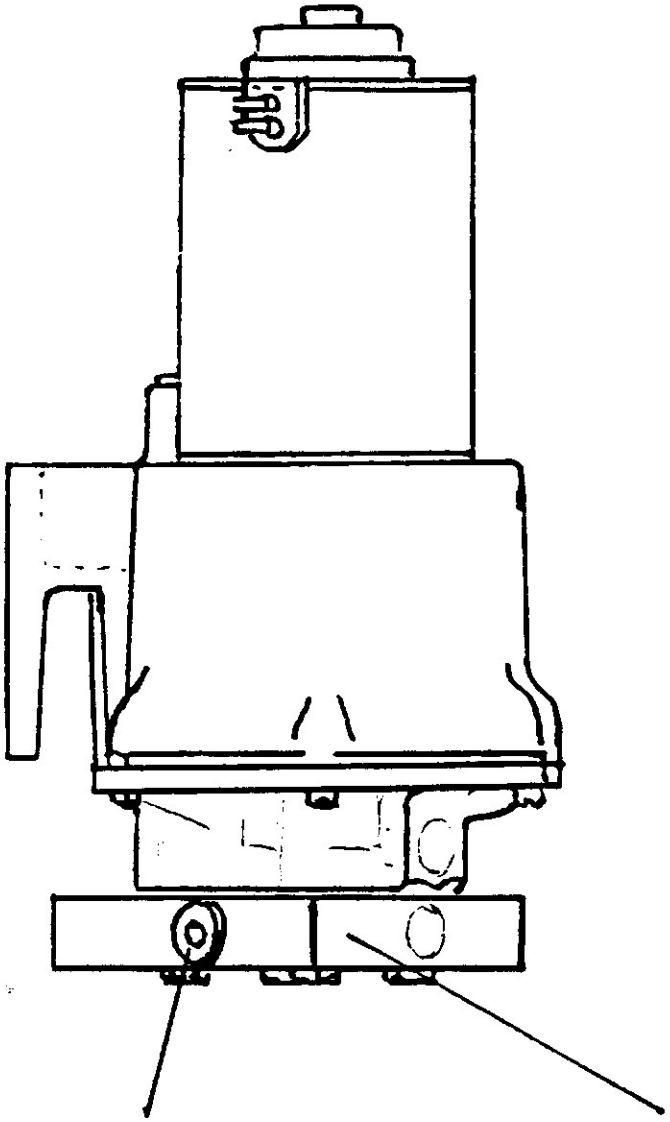

V12 Engineering
Box 50, Ontario, Canada P0X 1C0
www.bmwmerine.net